Packages

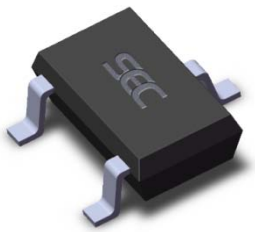

3 pin SOT23 (suffix SO)

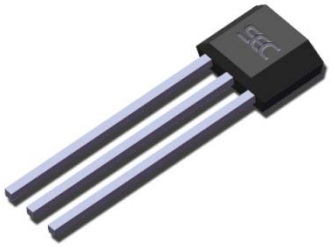

3 pin SIP (suffix UA)

Features and Benefits

- 3.5V to 24V Operation
- -40°C to 150°C Superior temperature operation
- CMOS technology
- Low current consumption
- Chopper-stabilized amplifier stage
- Open drain output
- Low sensitivity
- Small Size SOT23 3L and SIP 3L both RoHS compliant packages

Functional Block Diagram

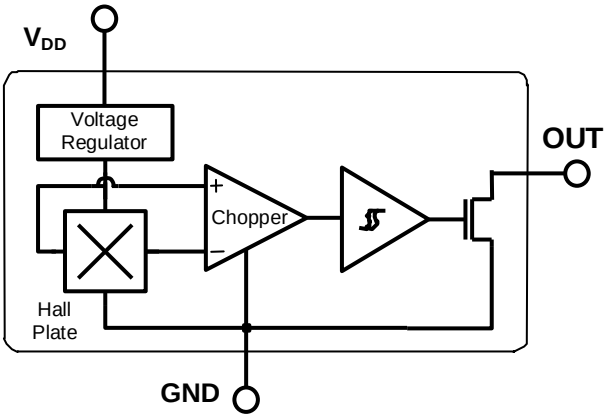

SIP Package	SOT Package
Pin 1 – V_{DD}	Pin 1 – V_{DD}
Pin 2 – GND	Pin 2 – OUT
Pin 3 – OUT	Pin 3 – GND

Application Examples

- Automotive, Consumer and Industrial
- Solid-state switch
- Brushless DC motor commutation
- Speed detection
- Angular position detection
- Proximity detection
- Current detector

General Description

The SS1332 is a unipolar Hall-effect sensor IC fabricated from CMOS technology. The device integrates a voltage regulator, Hall sensor with dynamic offset cancellation system, small signal amplifier, Schmitt trigger and an open-drain output driver. With suitable output pull up, they can be used with bipolar or CMOS logic circuits.

These Hall-effect switches are monolithic integrated circuits with tighter magnetic specifications, designed to operate continuously over extended temperatures to +150°C, and are more stable with both temperature and supply voltage changes. The unipolar switching characteristic makes these devices ideal for use with a simple bar or rod magnet.

Thanks to its wide operating voltage range and extended choice of temperature range, it is quite suitable for use in automotive, industrial and consumer applications.

The device is delivered in a Small Outline Transistor (SOT) or in a Plastic Single In Line (SIP 3L flat). Both 3-lead packages are RoHS compliant.

Glossary of Terms

MilliTesla (mT), Gauss	Units of magnetic flux density: 1mT = 10 Gauss
RoHS	Restriction of Hazardous Substances
Operating Point (B_{OP})	Magnetic flux density applied on the branded side of the package which turns the output driver ON ($V_{OUT} = V_{DSon}$)
Release Point (B_{RP})	Magnetic flux density applied on the branded side of the package which turns the output driver OFF (V_{OUT} = high)

Pin Definitions and Descriptions

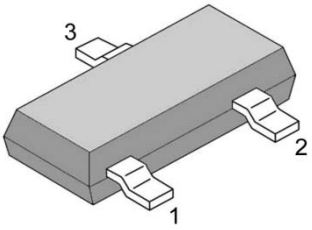

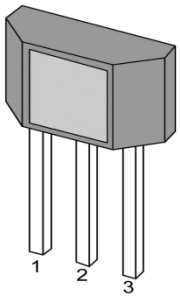

SOT Pin №	SIP Pin №	Name	Type	Function
1	1	V_{DD}	Supply	Supply Voltage pin
2	3	OUT	Output	Open Drain Output pin
3	2	GND	Ground	Ground pin

Absolute Maximum Ratings

Parameter	Symbol	Value	Units
Supply Voltage	V_{DD}	28	V
Supply Current	I_{DD}	50	mA
Output Voltage	V_{OUT}	28	V
Output Current	I_{OUT}	50	mA
Storage Temperature Range	T_S	-65 to 170	°C

Operating Temperature Range	Symbol	Value	Units
Temperature Suffix “E”	T_A	-40 to 85	°C
Temperature Suffix “K”	T_A	-40 to 125	°C
Temperature Suffix “L”	T_A	-40 to 150	°C

Exceeding the absolute maximum ratings may cause permanent damage. Exposure to absolute-maximum-rated conditions for extended periods may affect device reliability.

General Electrical Specifications

DC Operating Parameters T_A = 25°C, V_{DD}= 3.5V to 24V (unless otherwise specified)

Parameter	Symbol	Test Conditions	Min	Typ	Max	Units
Supply Voltage	V_{DD}	Operating	3.5		24	V
Supply Current	I_{DD}	$B < B_{RP}$	1.5	2.5	5	mA
Output Saturation Voltage	V_{DSon}	I_{OUT} = 20mA, $B > B_{OP}$		0.4	0.5	V
Output Leakage Current	I_{OFF}	$B < B_{RP}$ V_{OUT} = 24V		0.01	10	µA
Output Rise Time	t_r	R_L = 1kΩ, C_L = 20pF		0.25		µs
Output Fall Time	t_f	R_L = 1kΩ, C_L = 20pF		0.25		µs

Magnetic Specifications

Package	Parameter	Symbol	Test Conditions	Min	Typ	Max	Units
UA	Operating Point	B_{OP}	T_a=25°C,V_{dd}=12V DC	60	80	100	G
	Release Point	B_{RP}		20	50	80	G
	Hysteresis	B_{HYST}			30		G
SO	Operating Point	B_{OP}	T_a=25°C,V_{dd}=12V DC	-100	-80	-60	G
	Release Point	B_{RP}		-80	-50	-20	G
	Hysteresis	B_{HYST}			30		G

Output Behavior versus Magnetic Pole

DC Operating Parameters T_A = -40°C to 150°C, V_{DD} = 3.5V to 24V (unless otherwise specified)

Test Conditions (UA)	Test Conditions (SO)	OUT
$B < B_{RP}$	$B > B_{RP}$	High
$B > B_{OP}$	$B < B_{OP}$	Low

The SOT-23 device is reversed from the UA package. The SOT-23 output transistor will be turned on(drops low) in the presence of a sufficiently strong North pole magnetic field applied to the marked face.

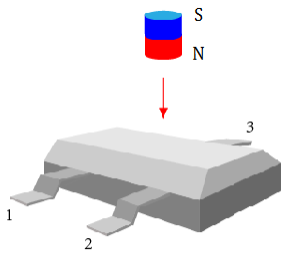

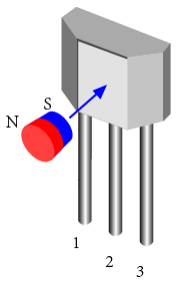

Application Information

Typical Three-Wire Application Circuit

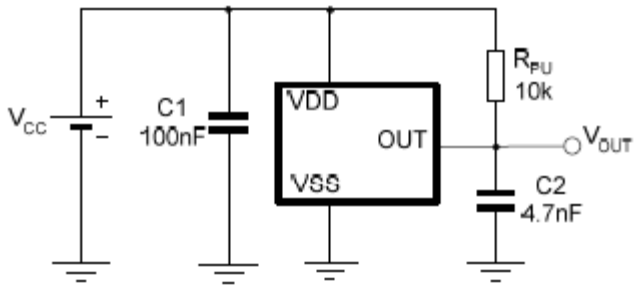

Automotive and Harsh, Noisy Environments Three-Wire Circuit

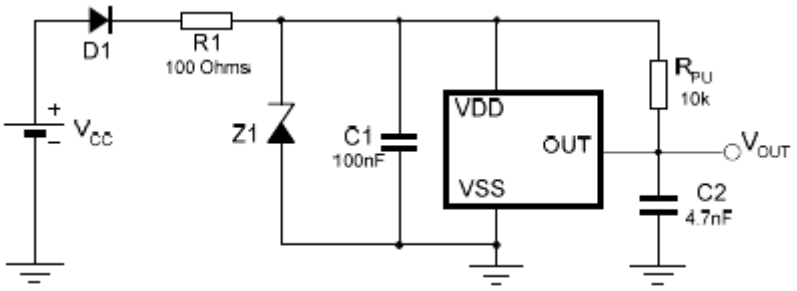

Application Comments

For proper operation, a 100nF bypass capacitor should be placed as close as possible to the device between the V_{DD} and ground pin.

For reverse voltage protection, it is recommended to connect a resistor or a diode in series with the V_{DD} pin.

When using a resistor, three points are important:

- the resistor has to limit the reverse current to 50mA maximum (V_{CC} / R1 ≤ 50mA)
- the resulting device supply voltage V_{DD} has to be higher than V_{DD} min ($V_{DD} = V_{CC} – R1.I_{DD}$)
- the resistor has to withstand the power dissipated in reverse voltage condition ($P_D = V_{CC}^2 / R1$)

When using a diode, a reverse current cannot flow and the voltage drop is almost constant (≈ 0.7V).

Therefore, a 100 Ω /0.25W resistor for 5V application and a diode for higher supply voltage are recommended. Both solutions provide the required reverse voltage protection.

When a weak power supply is used or when the device is intended to be used in noisy environment, it is recommended the second figure above is used.

The low-pass filter formed by R1 and C1 and the Zener diode Z1 bypass the disturbances or voltage spikes occurring on the device supply voltage V_{DD}. The diode D1 provides additional reverse voltage protection.

ESD Precautions

Electronic semiconductor products are sensitive to Electro Static Discharge (ESD).

Always observe Electro Static Discharge control procedures whenever handling semiconductor products.

Package Information

Package UA, 3-Pin SIP:

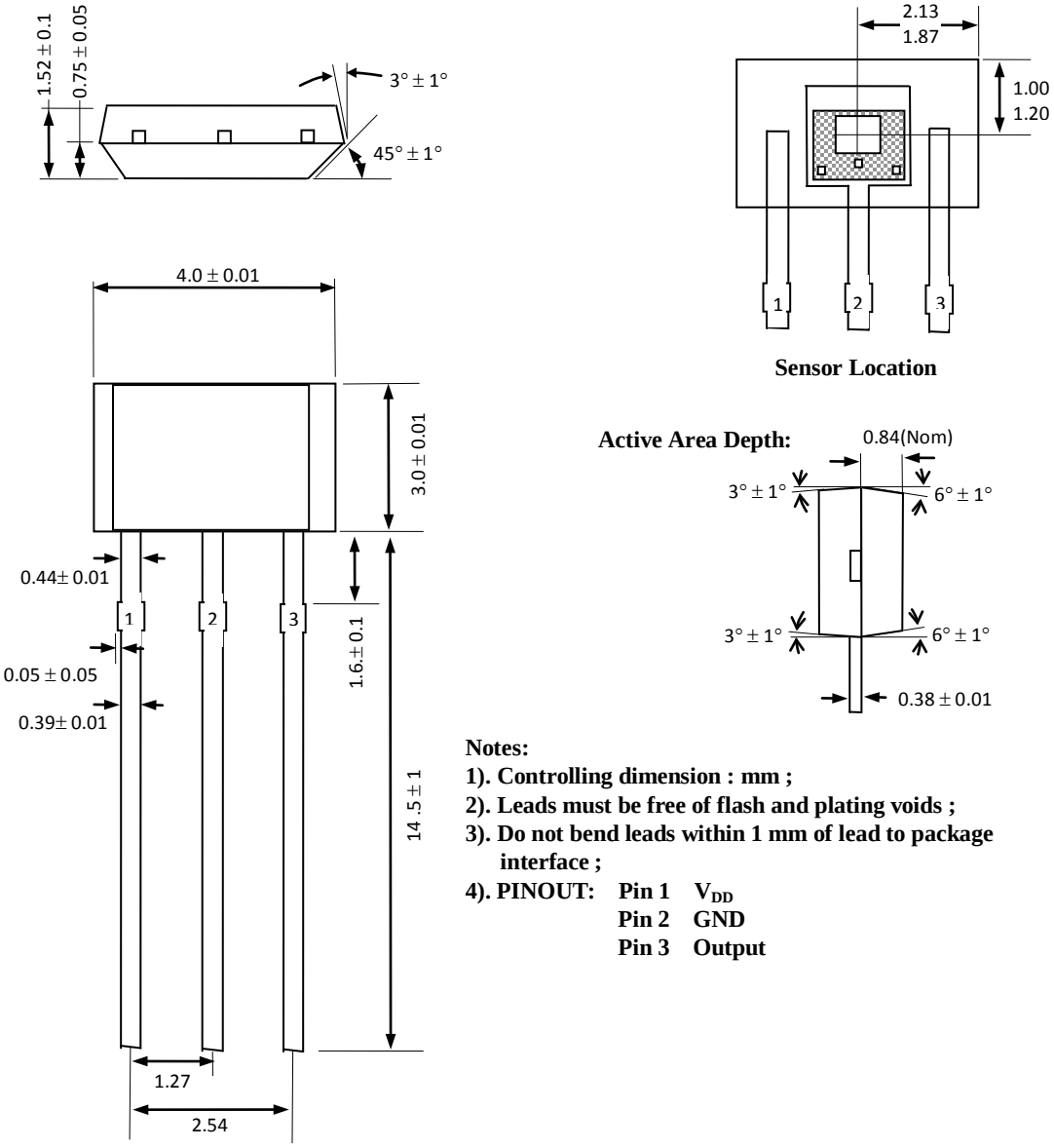

Sensor Location

Notes:

1). Controlling dimension : mm ;

2). Leads must be free of flash and plating voids ;

3). Do not bend leads within 1 mm of lead to package interface ;

4). PINOUT: **Pin 1** V_{DD}
Pin 2 **GND**
Pin 3 **Output**

Package SO, 3-Pin SOT-23:

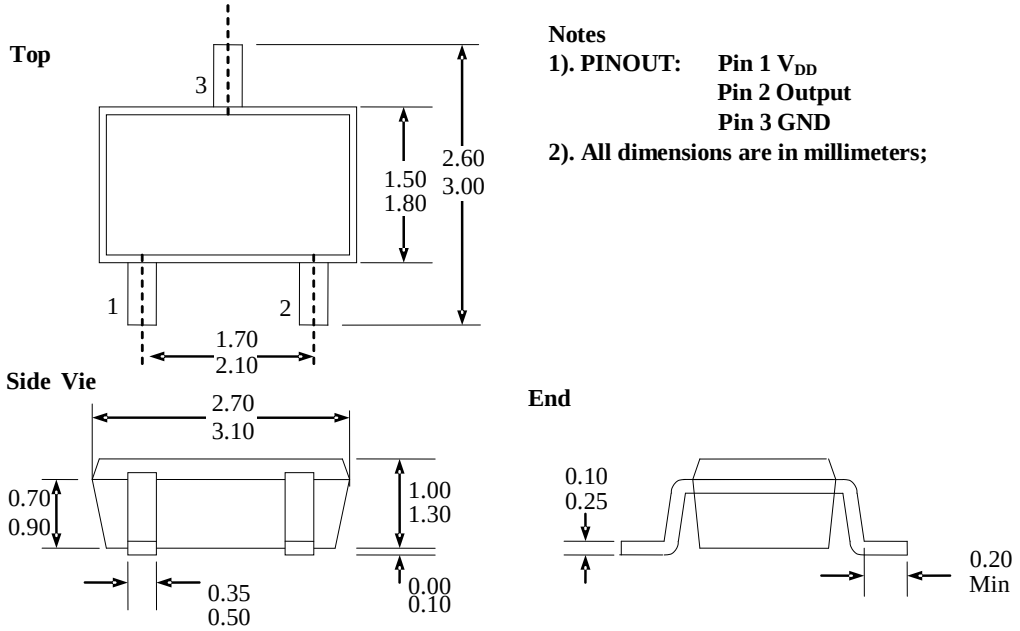

Notes

1). PINOUT: **Pin 1 V_{DD}**
Pin 2 Output
Pin 3 GND

2). All dimensions are in millimeters;

Ordering Information

Part No.	Pb-free	Temperature Code	Package Code	Packing
SS1332ESOT	YES	-40°C to 85°C	SOT-23	7-in. reel, 3000 pieces/reel
SS1332EUA	YES	-40°C to 85°C	TO-92	Bulk, 1000 pieces/bag
SS1332KSOT	YES	-40°C to 125°C	SOT-23	7-in. reel, 3000 pieces/reel
SS1332KUA	YES	-40°C to 125°C	TO-92	Bulk, 1000 pieces/bag
SS1332LSOT	YES	-40°C to 150°C	SOT-23	7-in. reel, 3000 pieces/reel
SS1332LUA	YES	-40°C to 150°C	TO-92	Bulk, 1000 pieces/bag